JOB#

500-006

ACTUAL SIZE

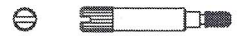

SCALE: 4/1

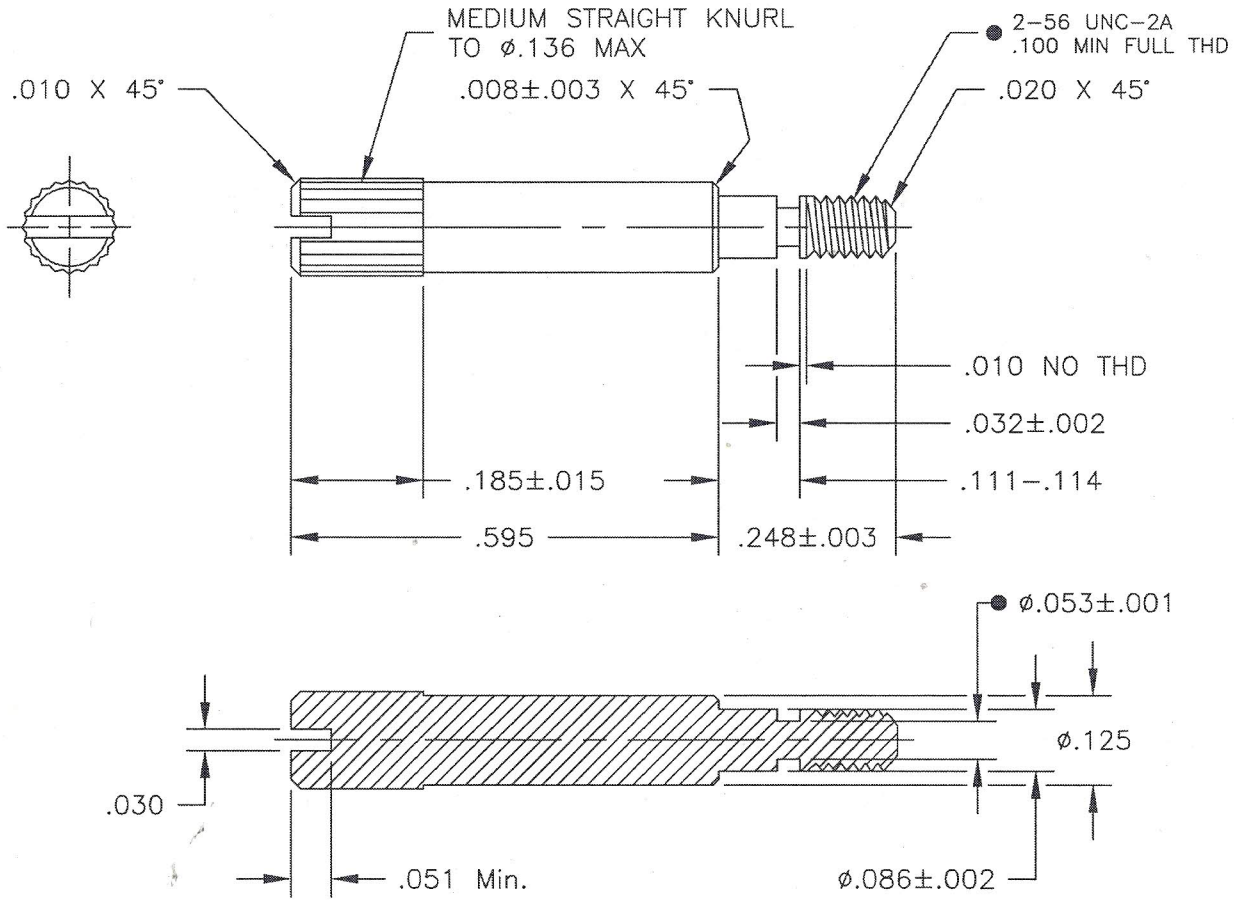

TITLE:	HIGH-PROFILE, 2-56
PART #:	M83513/5-06
REVISION:	H
MATERIAL:	303 SST (B) SEE NOTE 2
FINISH:	PASSIVATE SAE-AMS-2700
PLATING:	N/A
TOLERANCES:	.XX± .XXX± .005 ANGLE ± 3° FRACTION ± CONCENTRICITY: .003 TIR

APPROVALS	DATE
DRAWN BY: M. FELKINS	99/10/25
CHECKED BY: C. DUBREUIL	11/02/99
Q.C. BY: J. FLOWERS	11/02/99

F/N: 500-006-A

HI-TECH SWISS ENGINEERING

▶ CRITICAL CHARACTERISTIC SPC REQD (VARIABLE)

● MAJOR CHARACTERISTIC SPC REQD (ATTRIBUTE)

NOTES:

1. REMOVE ALL BURRS AND SHARP EDGES.
2. MATERIAL CONDITION/125,000 PSI MINIMUM TENSILE.